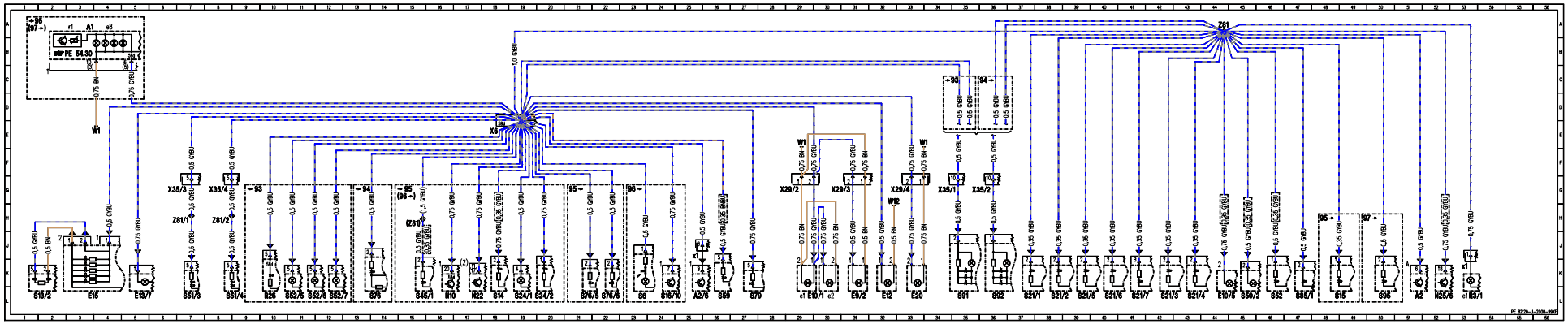

PE 54.30
X6
Z81
W1
W12
X35/3
X35/4
X29/2
X29/3
X29/4
X35/1
X35/2
Z81/1
Z81/2
S13/2
E15
E13/7
S51/3
S51/4
R26
S52/5
S52/6
S52/7
S76
S45/1
N10
N22
S14
S24/1
S24/2
S76/5
S76/6
S6
S16/10
A2/6
S59
S79
E10/1
E9/2
E12
E20
S91
S92
S21/1
S21/2
S21/5
S21/6
S21/7
S21/3
S21/4
E10/5
S50/2
S52
S85/1
S15
S95
A2
N25/6
R3/1