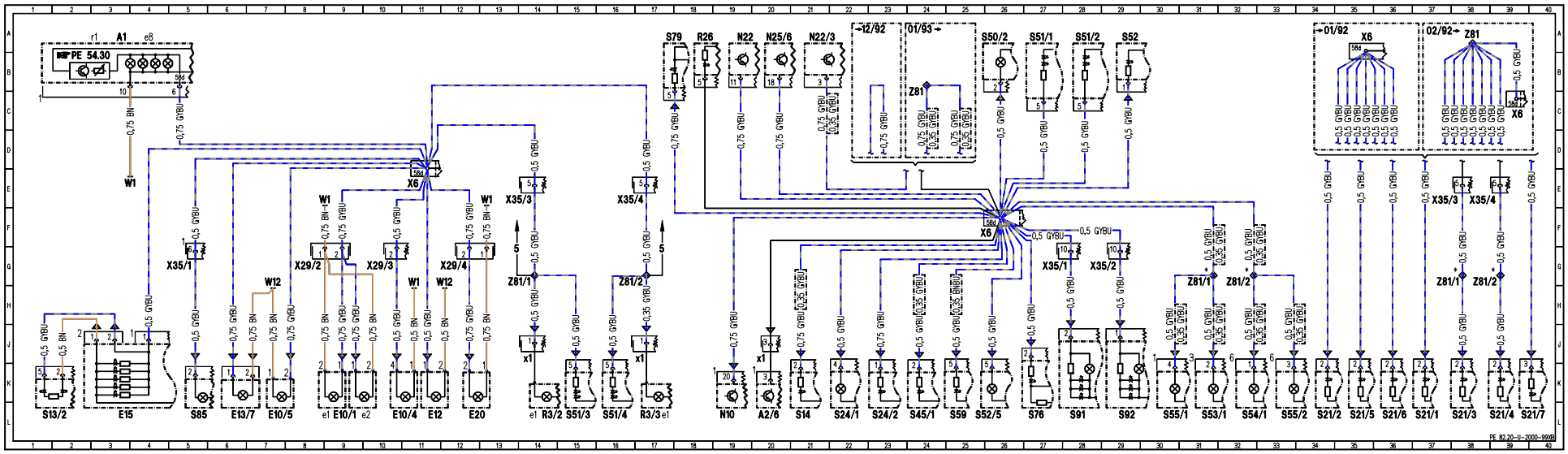
PE 54.30
A1
S79
R26
N22
N25/6
N22/3
S50/2
S51/1
S51/2
S52
X6
X35/1
X35/2
X35/3
X35/4
X29/2
X29/3
X29/4
Z81/1
Z81/2
Z81
W1
W12
S13/2
E15
S85
E13/7
E10/5
E10/1
E10/4
E12
E20
R3/2
S51/3
S51/4
R3/3
N10
A2/6
S14
S24/1
S24/2
S45/1
S59
S52/5
S76
S91
S92
S55/1
S53/1
S54/1
S55/2
S21/2
S21/5
S21/6
S21/1
S21/3
S21/4
S21/7
PE 82.20-U-2000-990XB