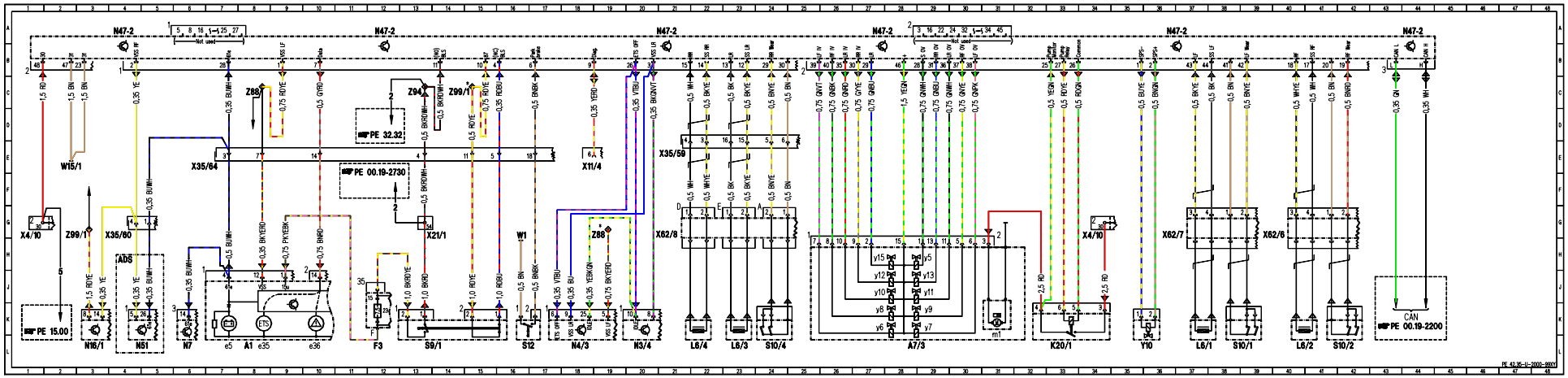
N47-2
W15/1
X4/10
Z99/1
X35/60
ADS
N16/1
N51
N7
A1
Z88
X35/64
PE 32.32
PE 00.19-2730
Z94
Z99/1
X21/1
F3
S9/1
W1
S12
X11/4
Z88
N4/3
N3/4
X35/59
X62/8
L6/4
L6/3
S10/4
A7/3
m1
K20/1
X4/10
Y10
X62/7
X62/6
L6/1
S10/1
L6/2
S10/2
CAN
PE 00.19-2200
PE 15.00
PE 42.35-U-2000-99XY