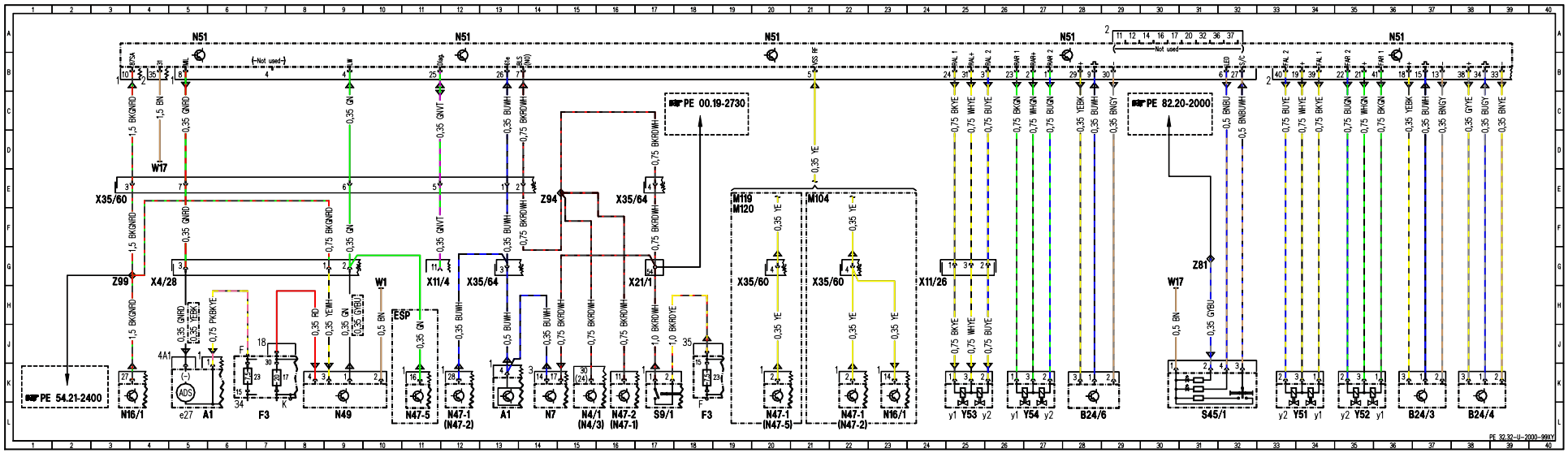

N51
PE 00.19-2730
PE 82.20-2000
PE 54.21-2400
X35/60
X4/28
X11/4
X35/64
X21/1
X11/26
Z99
Z94
Z81
W17
W1
ESP
M119
M120
M104
N16/1
A1
F3
N49
N47-5
N47-1 (N47-2)
N7
N4/1 (N4/3)
N47-2 (N47-1)
S9/1
N47-1 (N47-5)
Y53
Y54
B24/6
S45/1
Y51
Y52
B24/3
B24/4
PE 32.32-U-2000-99XY